SERIES 1
ROTARY VANE PUMP
BOLT-ON STYLE
"E" MOUNTING
3/8" NPT PORTS
WITH RELIEF VALVE

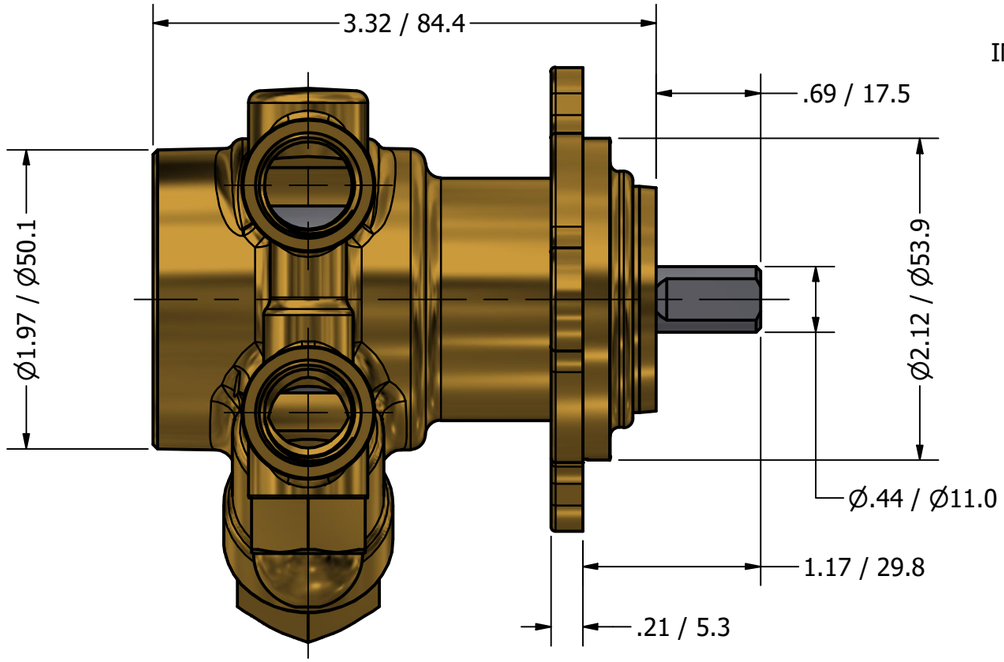

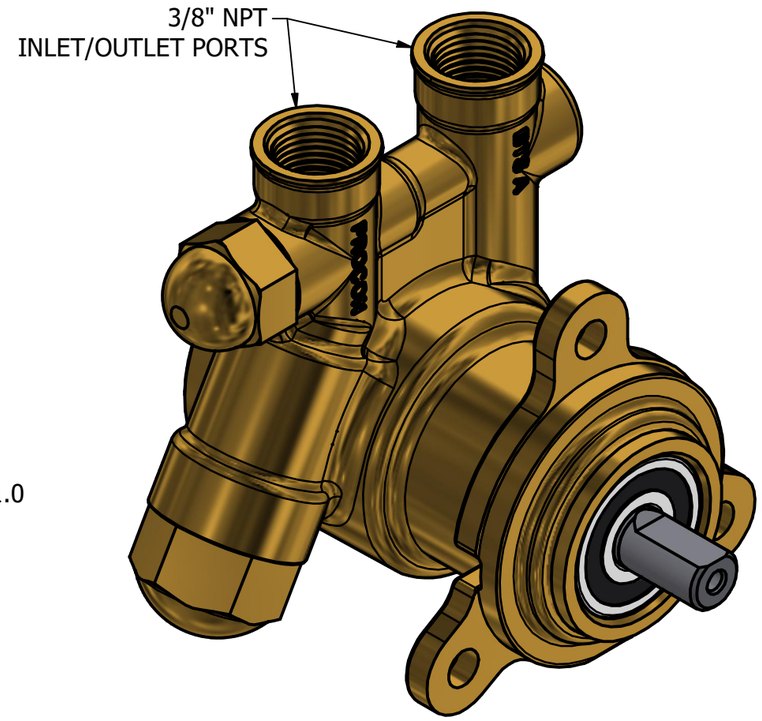

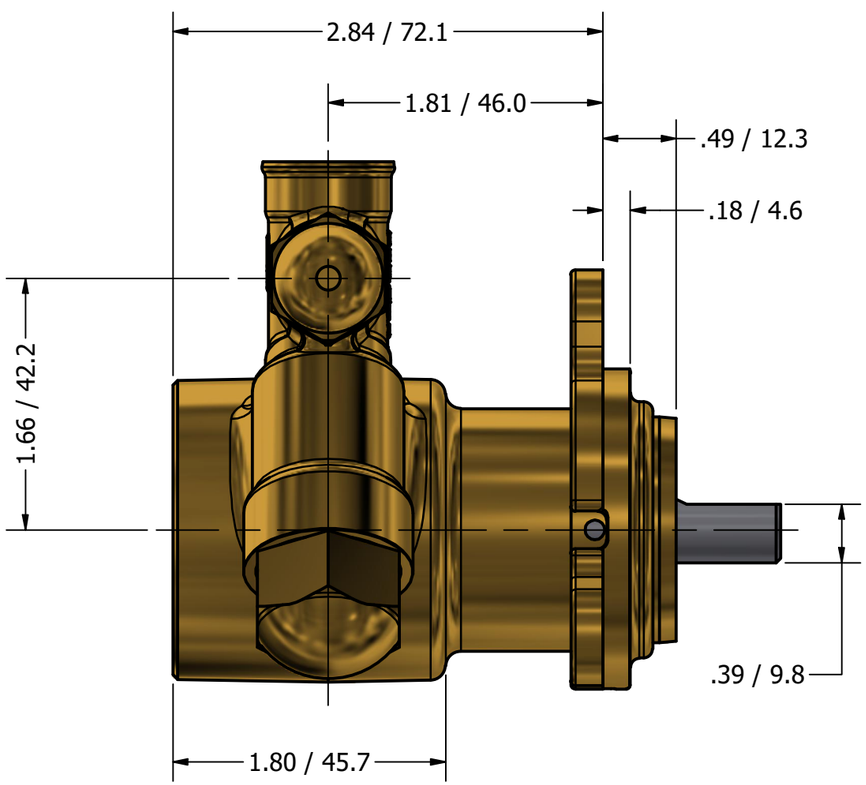

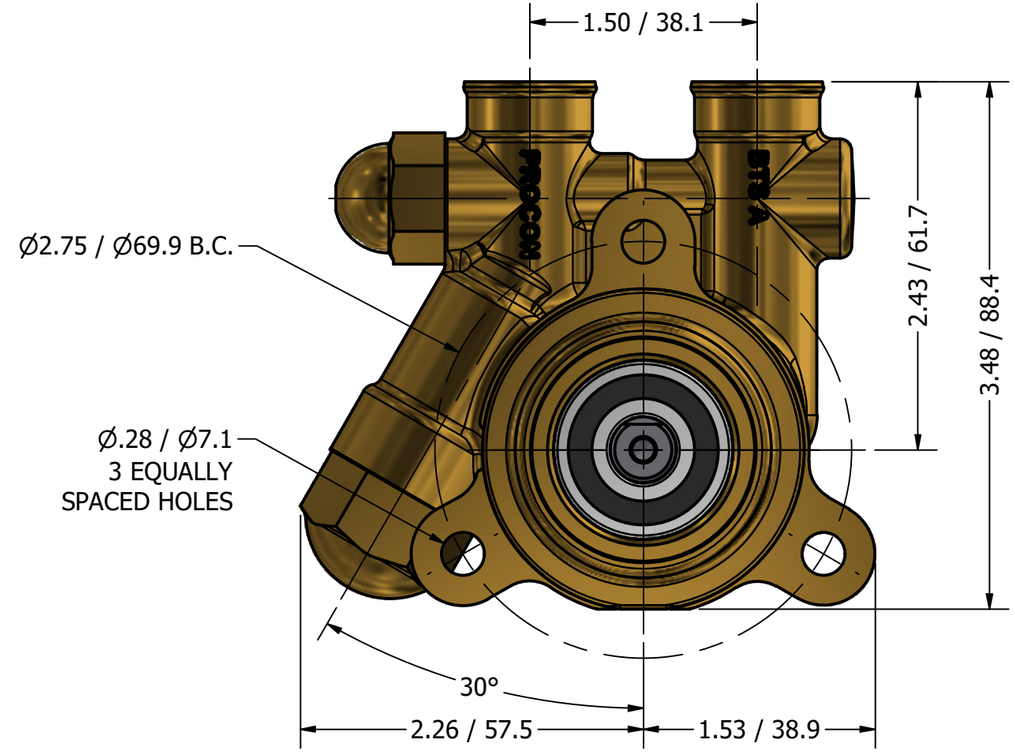

PROCON®
custom | fluid | solutions®

W1025 v2