MICRO VANE PUMP
80 WATT MOTOR
1/8" NPT PORTS
WITH RELIEF VALVE

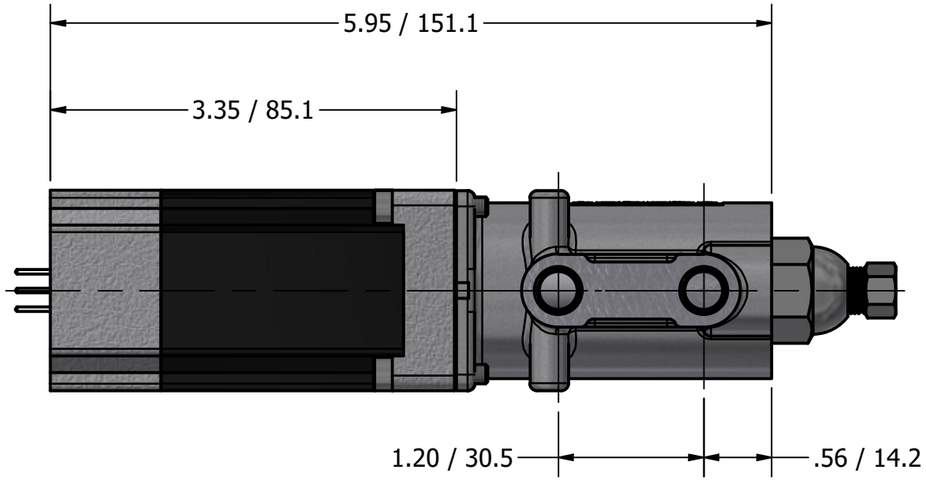

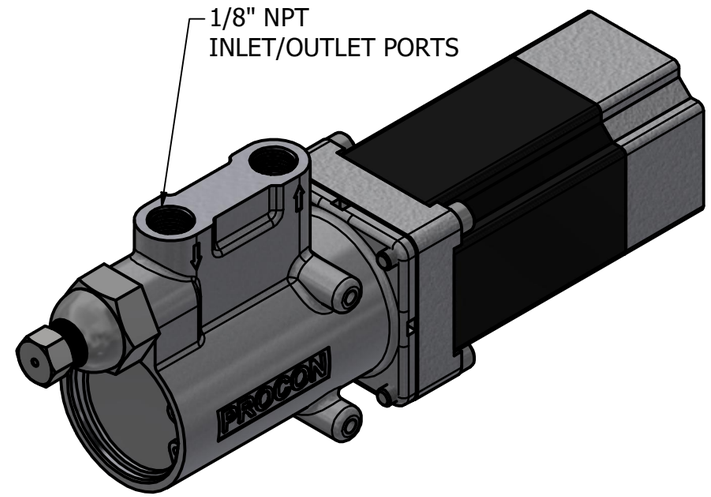

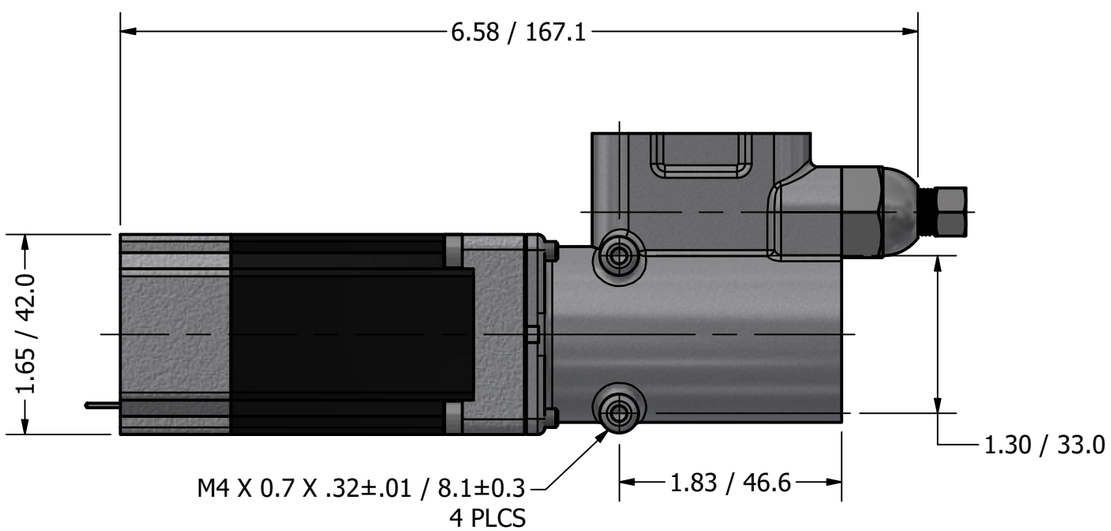

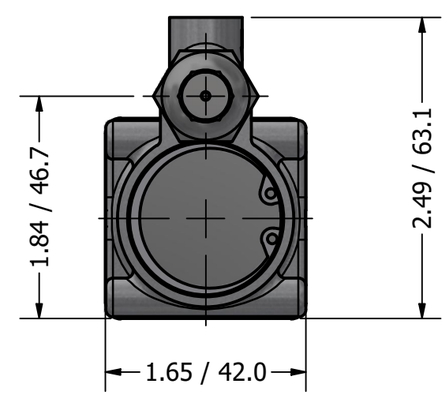

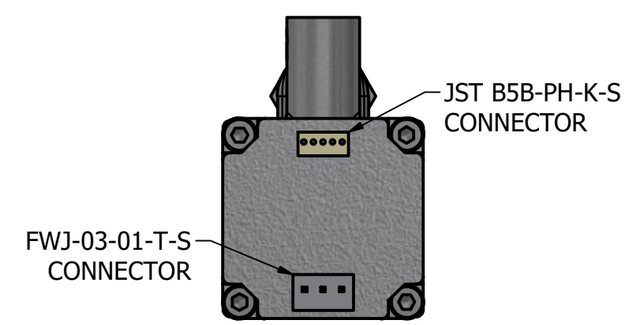

PROCON®
custom | fluid | solutions®

W6019 v2