MICRO GEAR PUMP
40 WATT MOTOR
G1/8 (BSPP) PORTS

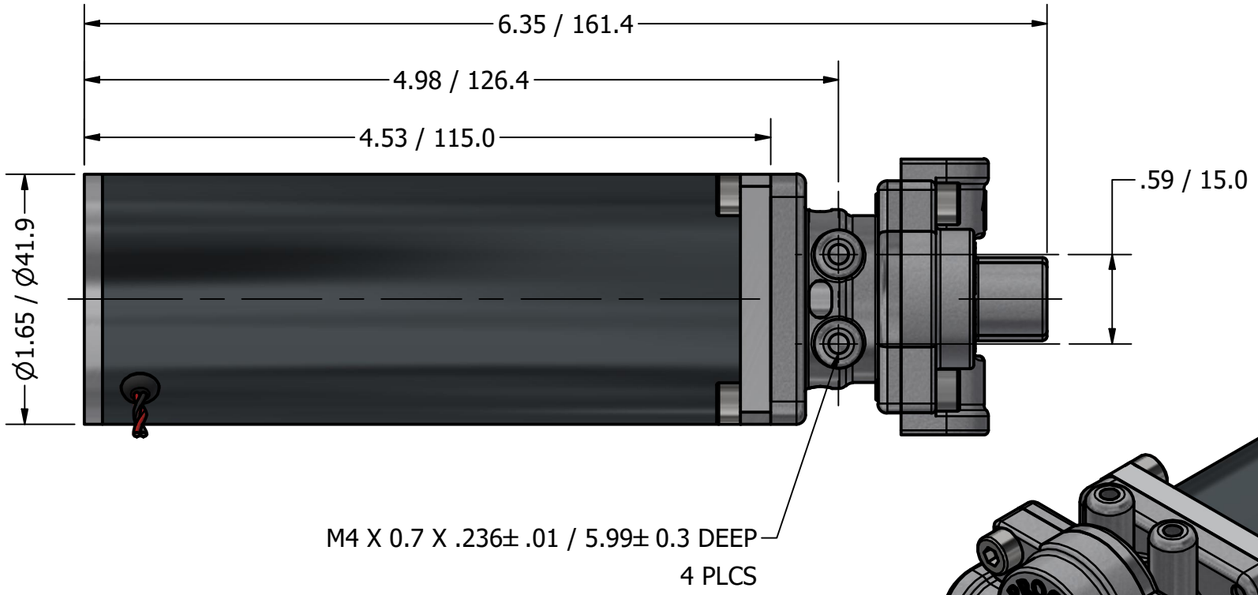

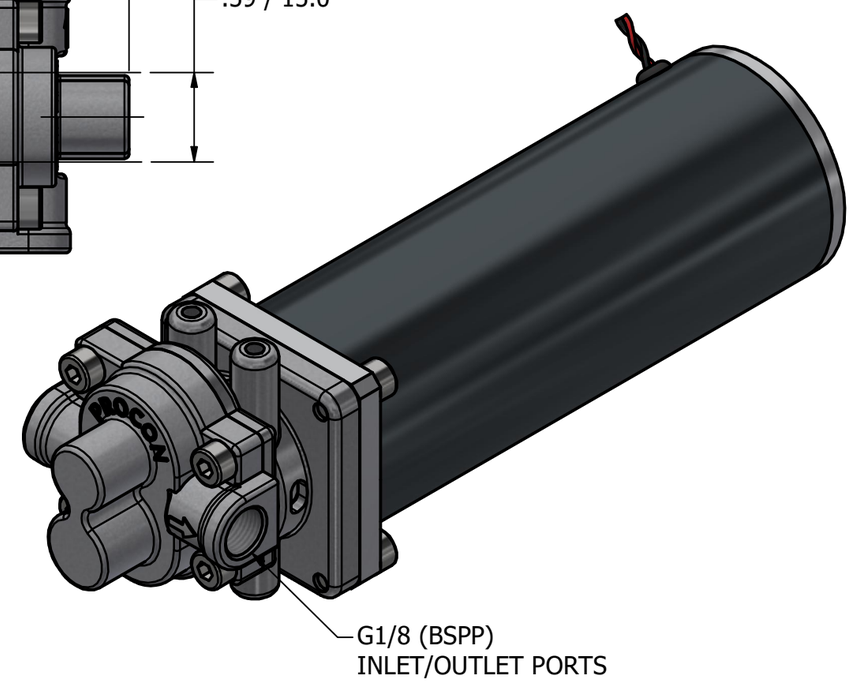

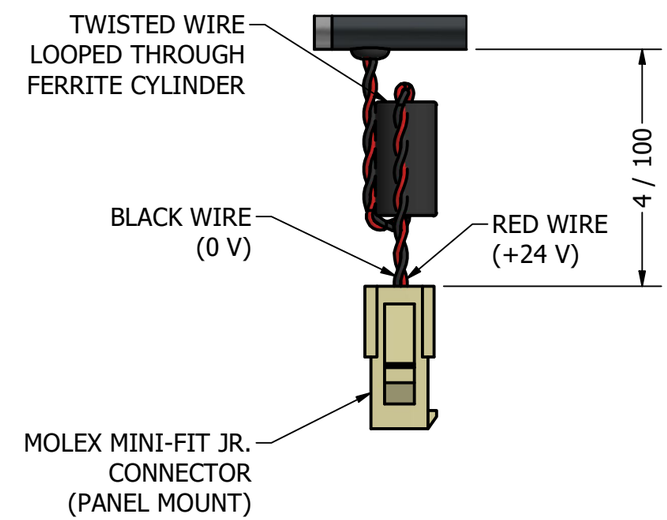

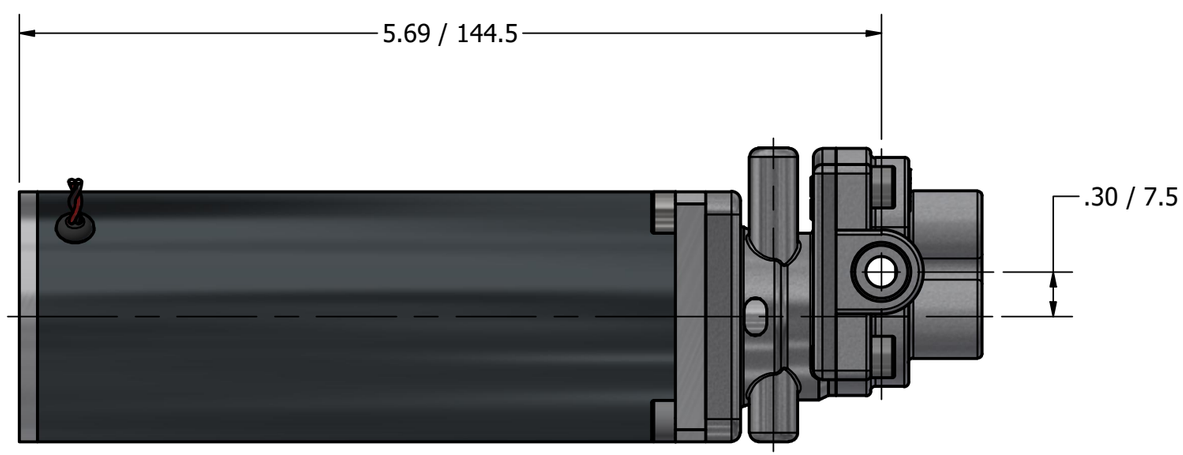

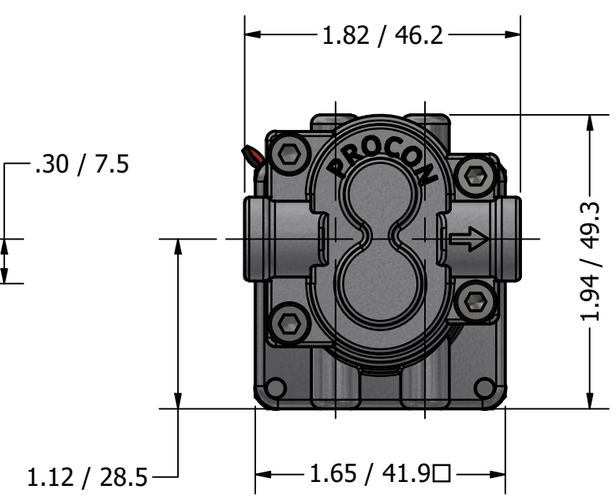

PROCON®
custom | fluid | solutions®

W5009 v2