SERIES 3
ROTARY VANE PUMP
CLAMP-ON STYLE
"A" MOUNTING
G3/8 (BSPP) PORTS

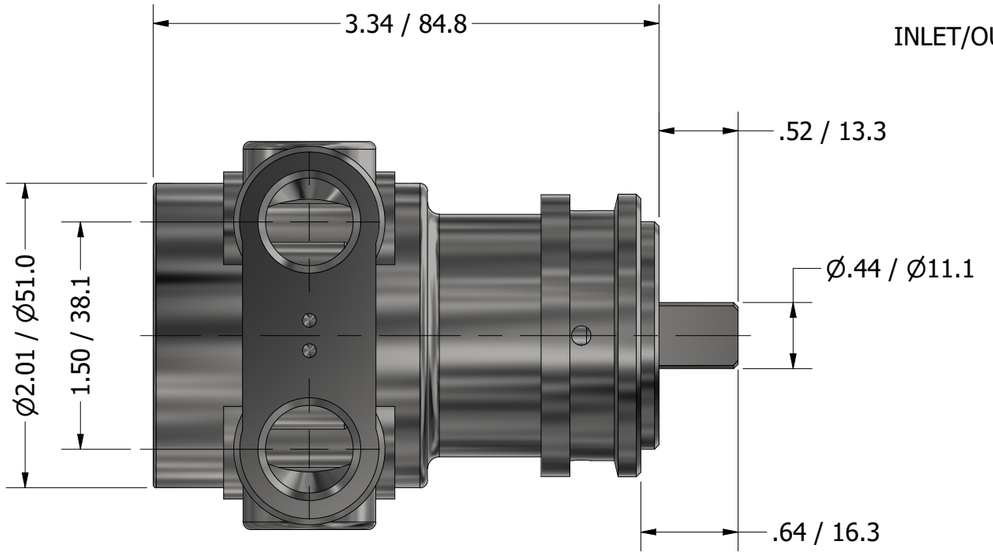

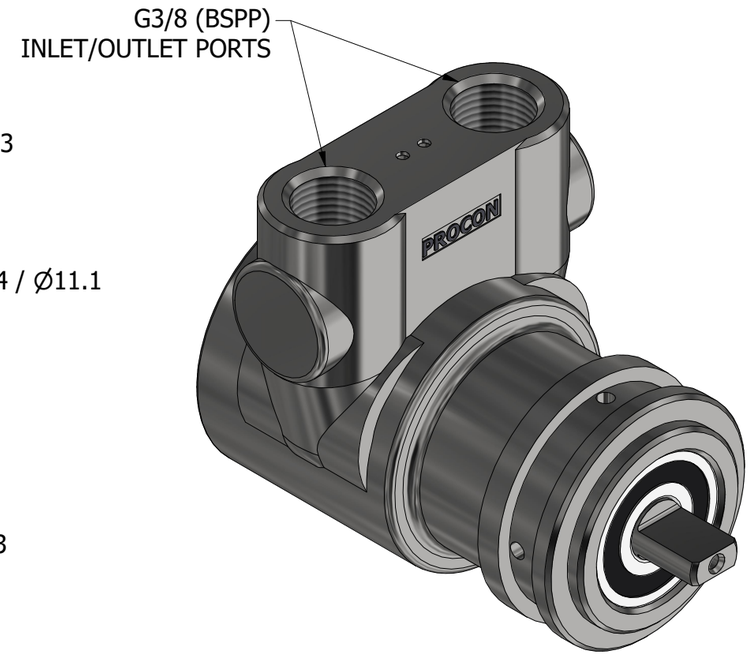

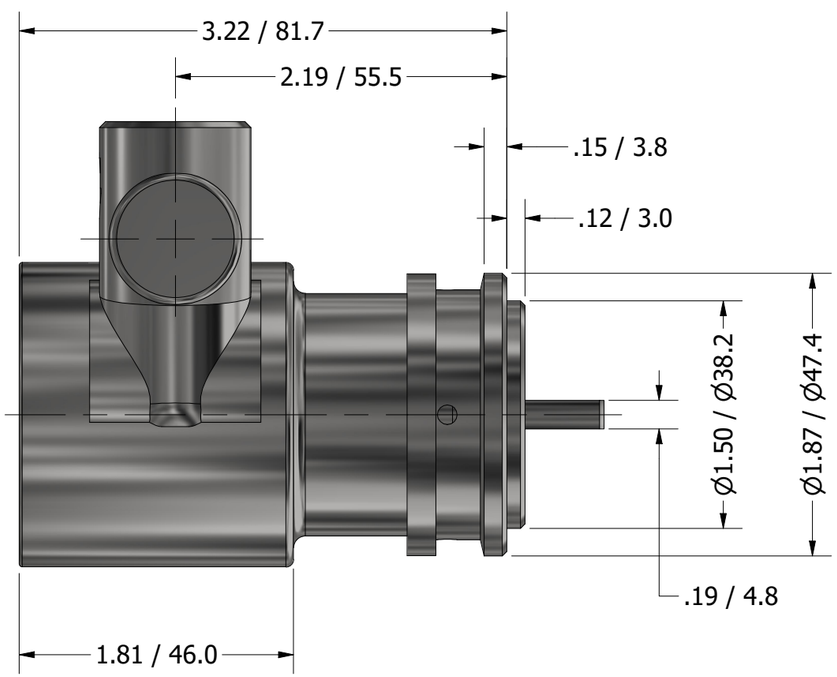

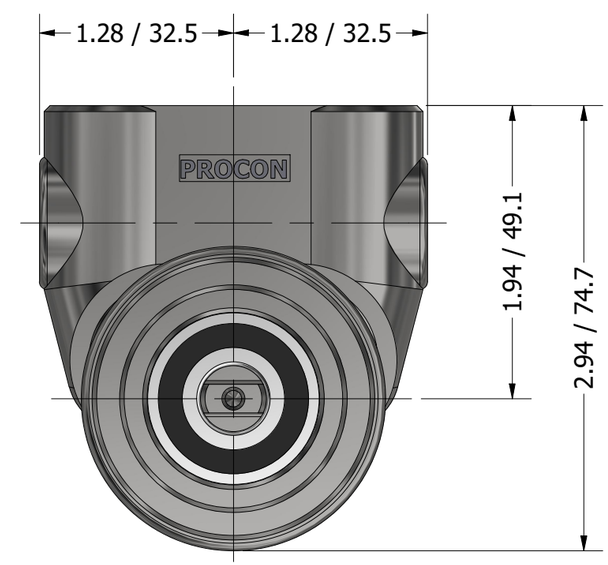

PROCON®
custom | fluid | solutions®
a division of Standex

W1082