HELICAL GEAR PUMP
30 WATT MOTOR
G1/8 (BSPP) PORTS

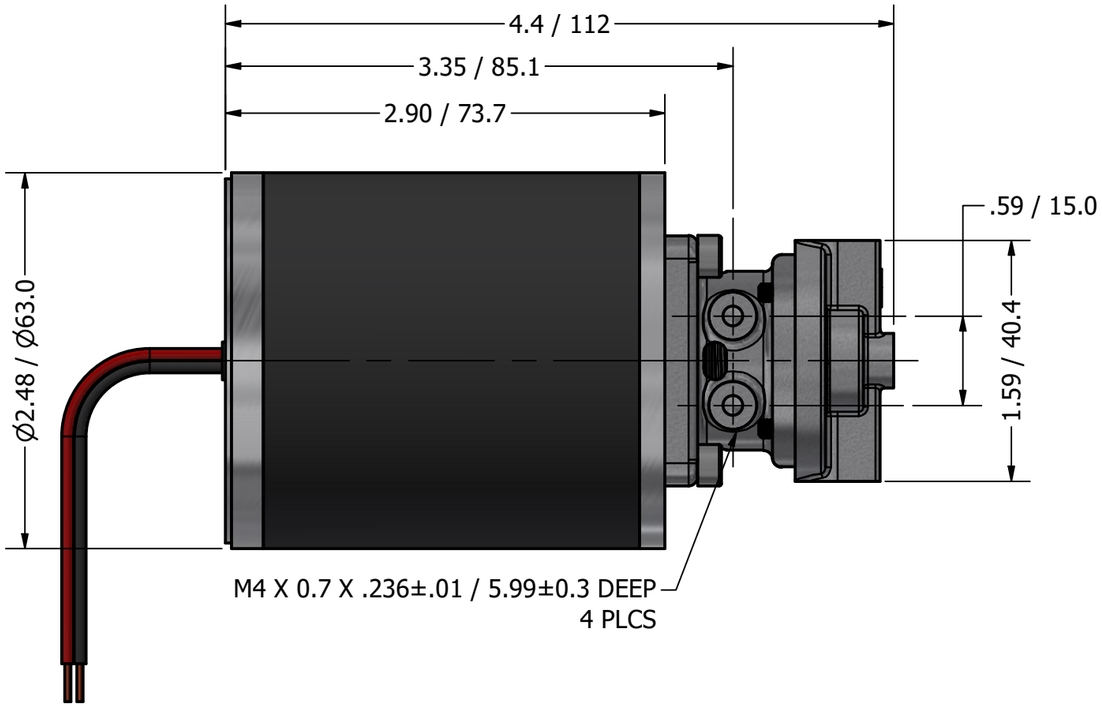

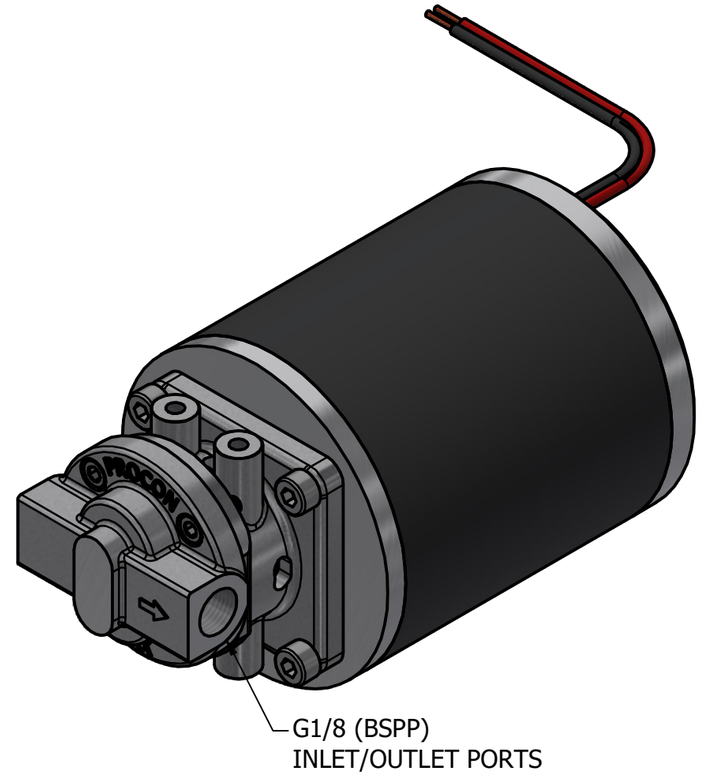

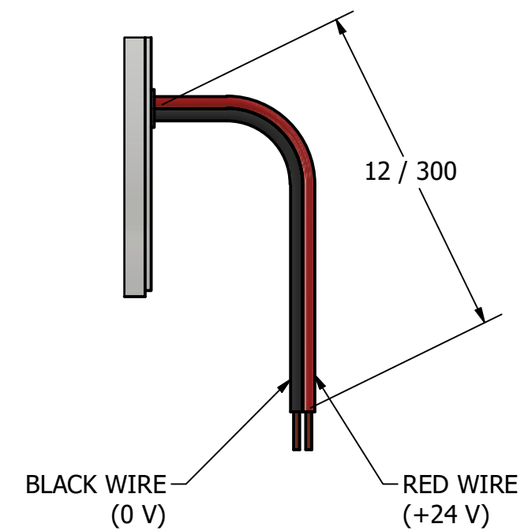

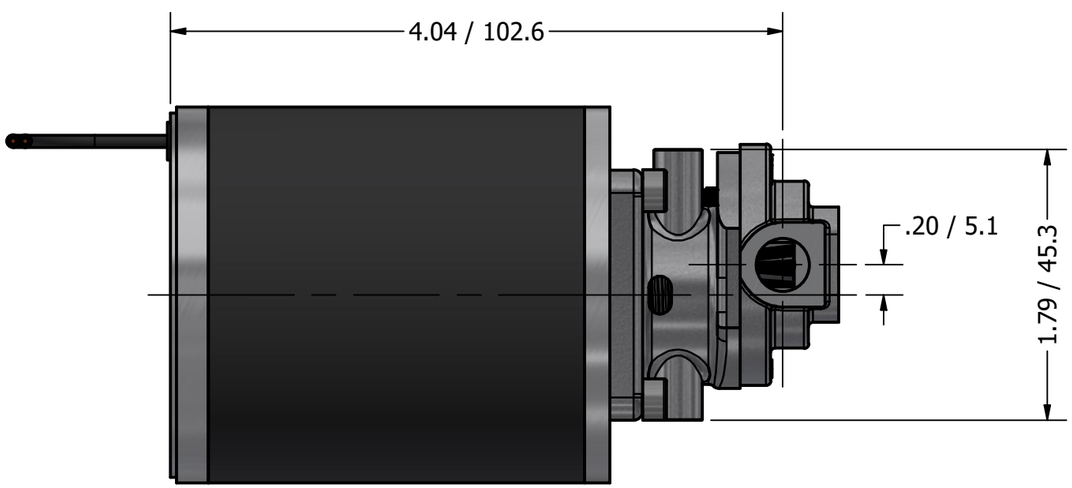

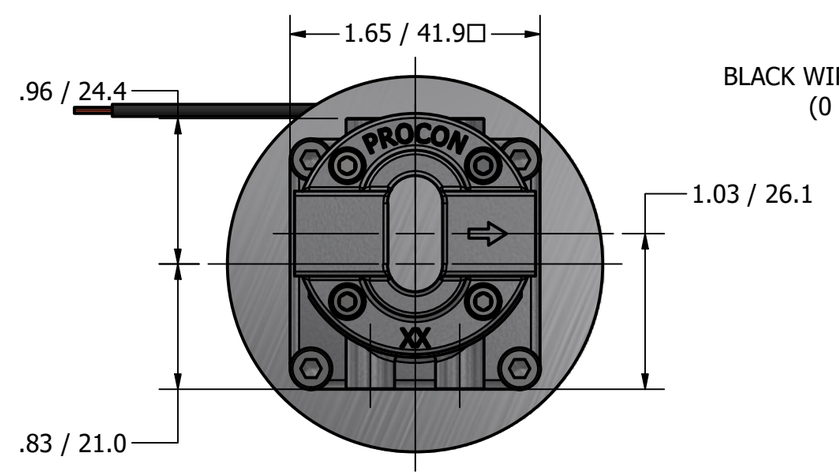

PROCON®
custom | fluid | solutions®

W5041 v2