SERIES 2
ROTARY VANE PUMP
BOLT-ON STYLE
"K" MOUNTING
3/8" NPT PORTS

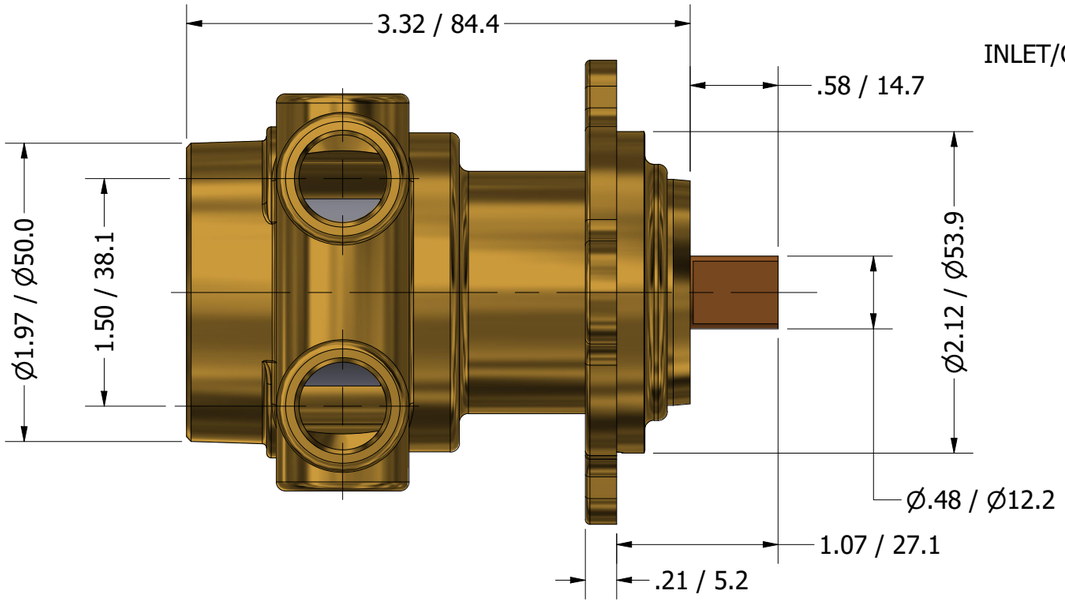

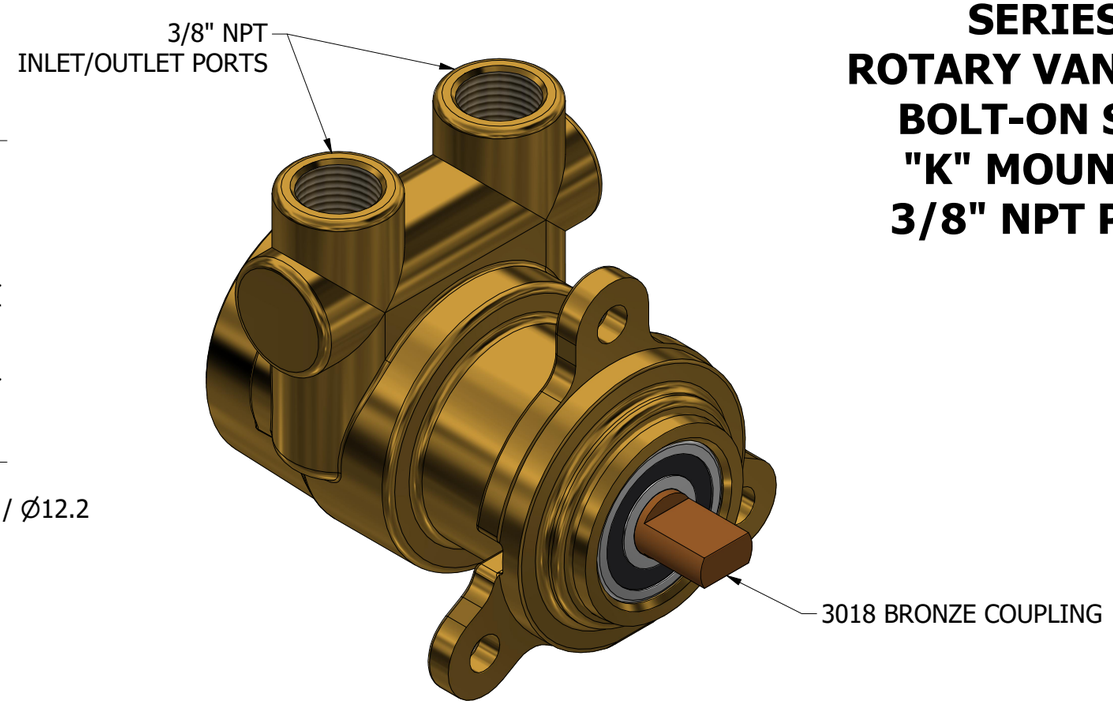

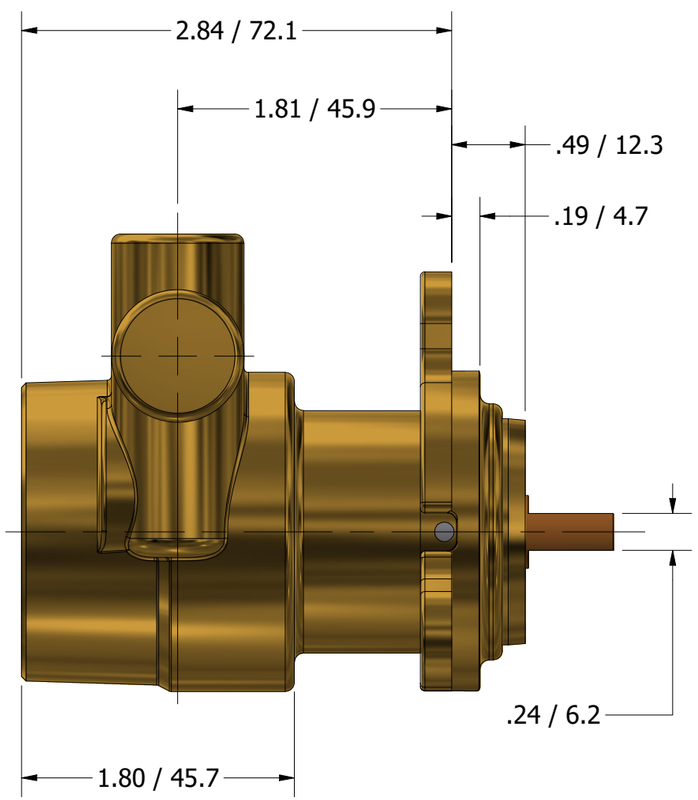

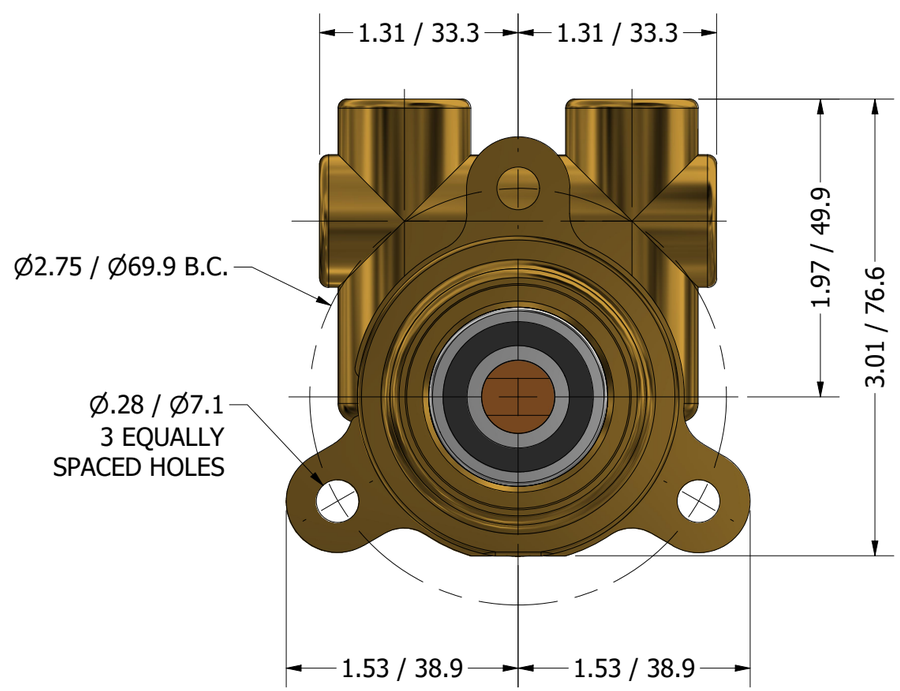

PROCON®
custom | fluid | solutions®
a division of Standex

W1068