SERIES 4
ROTARY VANE PUMP
BOLT-ON STYLE
"L" MOUNTING
1/2" NPT PORTS
WITH RELIEF VALVE

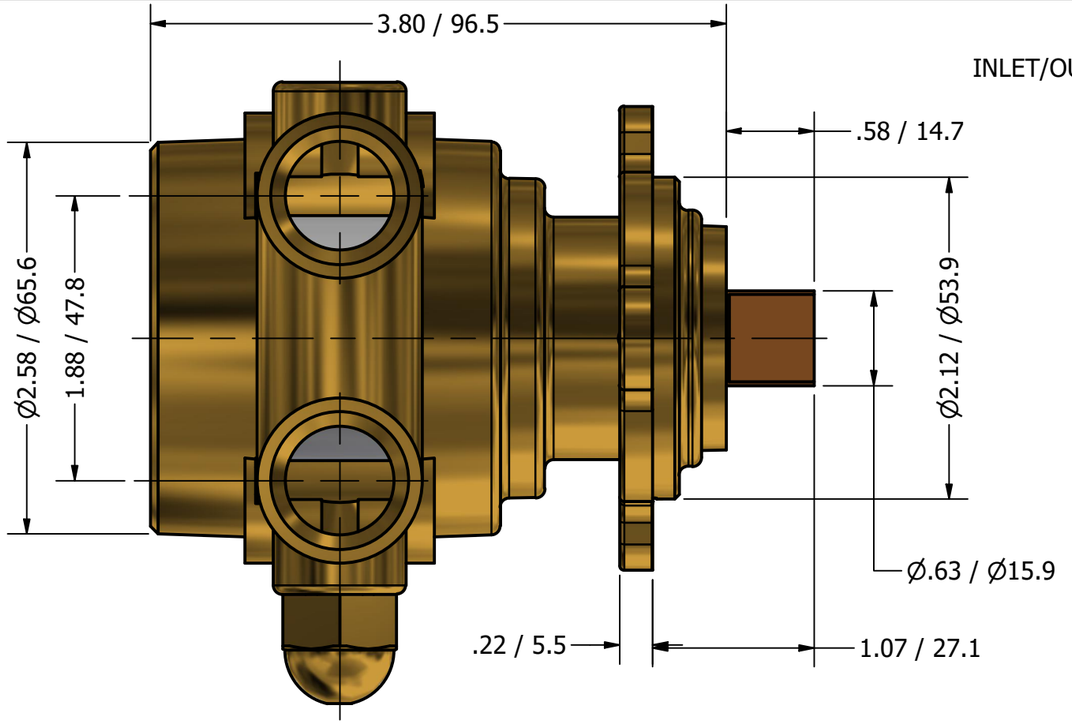

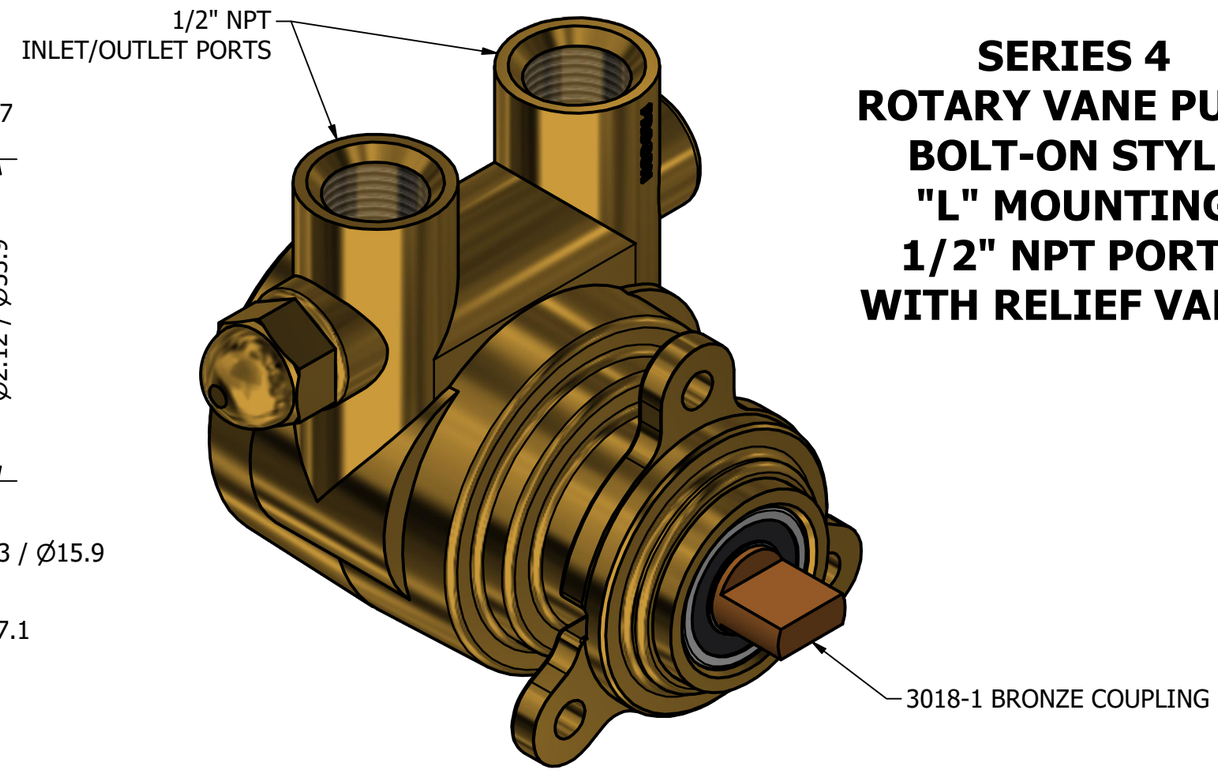

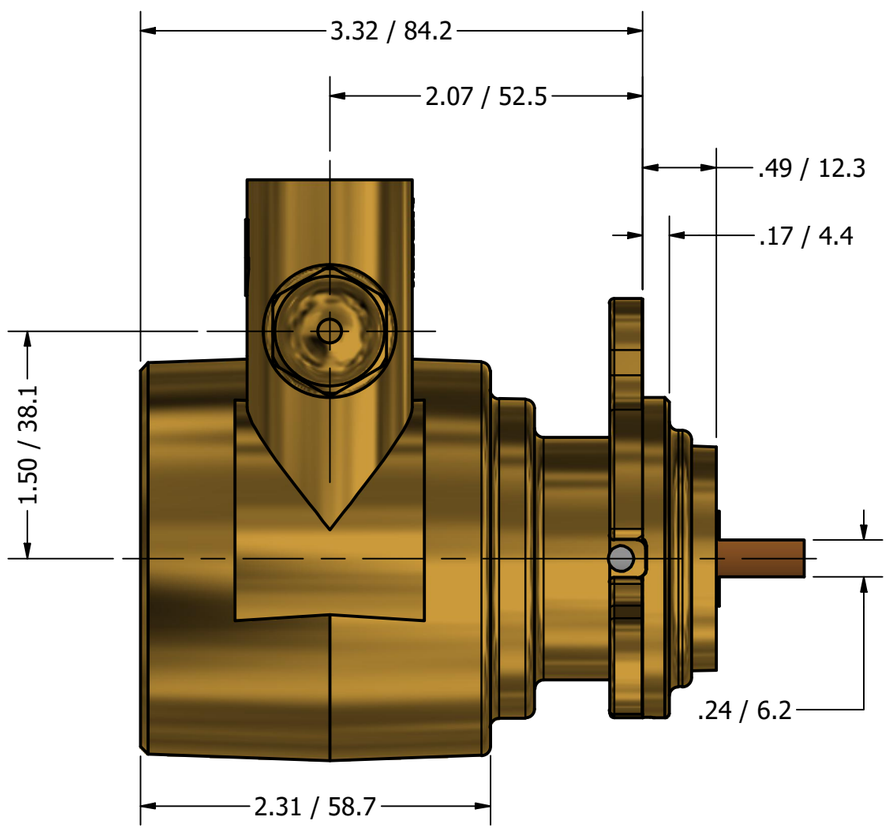

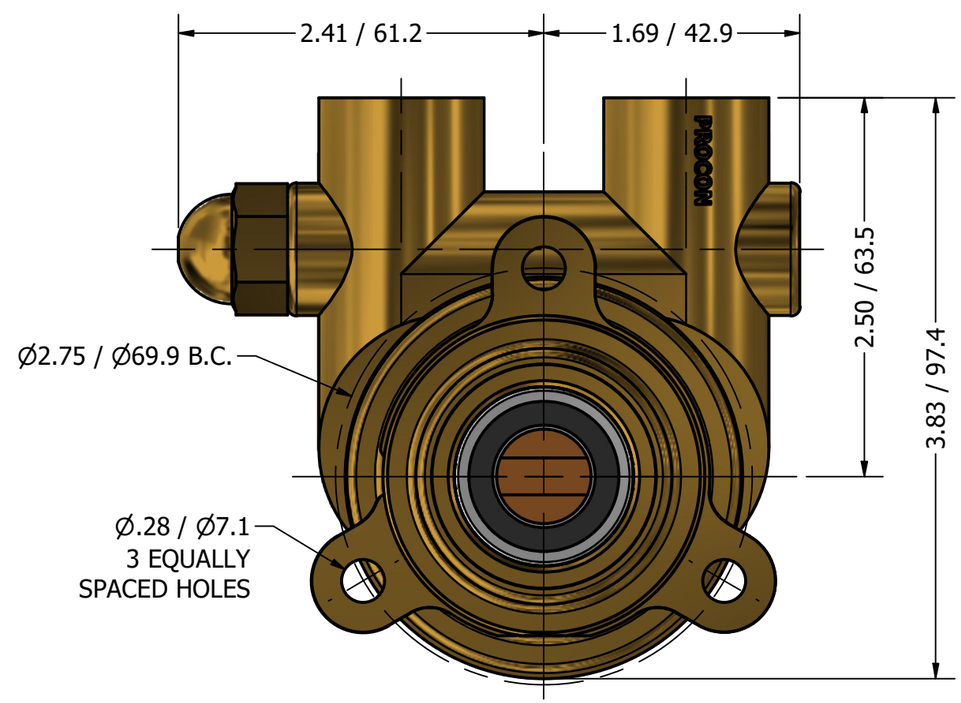

PROCON®
custom | fluid | solutions®

W1148 v2